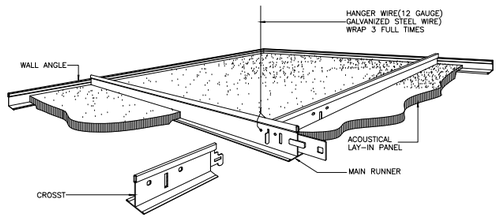


## ACOUSTICAL HUNG CEILING ASSEMBLY DETAIL–ISOMETRIC VIEW

NOT TO SCALE

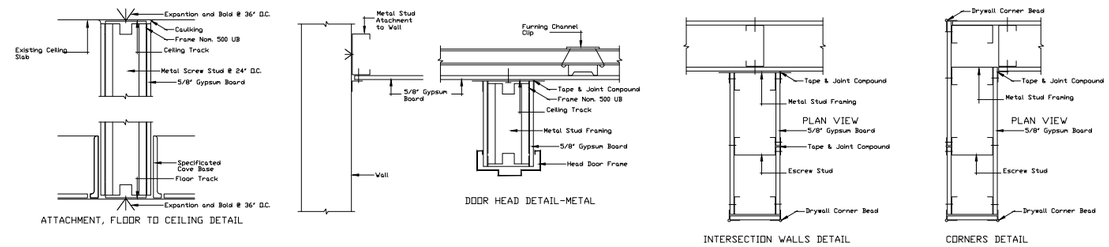


ATTACHMENT, FLOOR TO CEILING DETAIL — DOOR HEAD DETAIL-METAL — INTERSECTION WALLS DETAIL — CORNERS DETAIL

## GYPSUM WALLBOARD, CONSTRUCTION DETAILS (TYPICAL)

NO A ESCALA

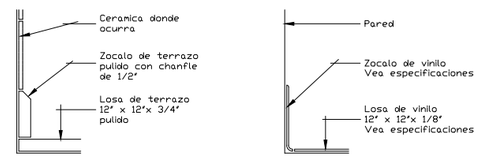


## DETALLES TIPICOS DE ZOCALOS

NO A ESCALA

## GYPSUM WALL TYPICAL DETAILS

SCALE: N.T.S.

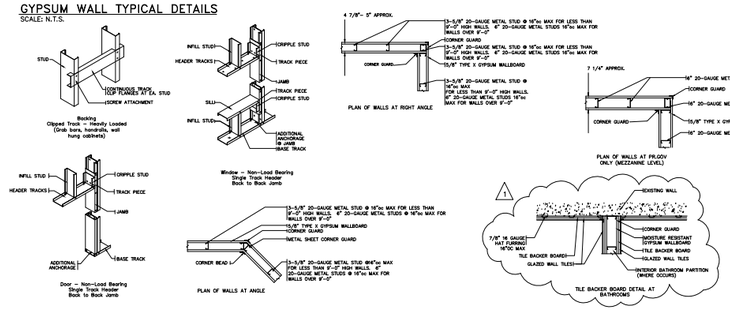


## ACOUSTICAL CEILING SUSPENSION GRID SYSTEM DETAILS

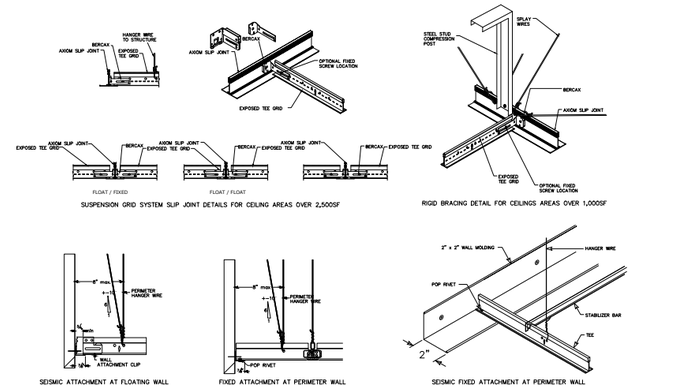


## SOUND ATTENUATION BLANKET (SAB) TYPICAL DETAILS

SCALE: N.T.S.

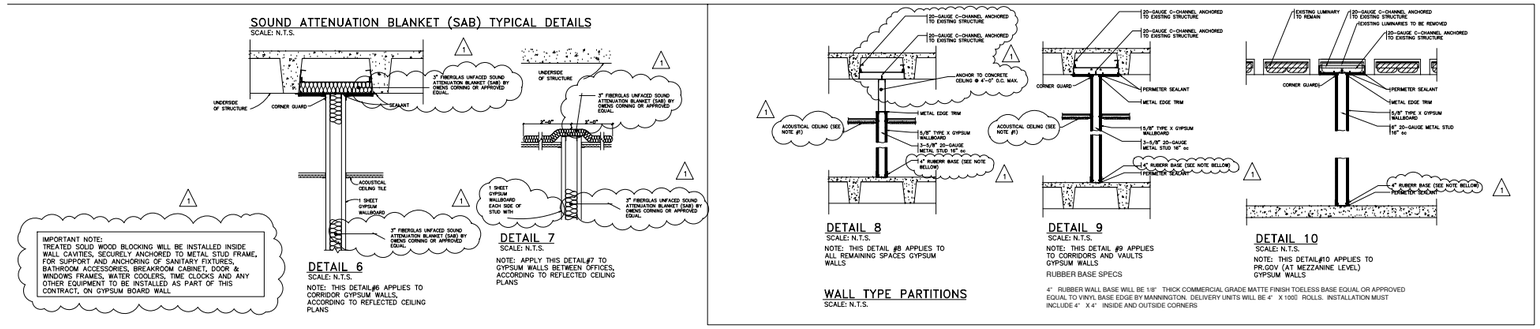


### DETAIL 6

SCALE: N.T.S.

NOTE: THIS DETAIL#6 APPLIES TO CORRIDOR GYPSUM WALLS, ACCORDING TO REFLECTED CEILING PLANS

### DETAIL 7

SCALE: N.T.S.

NOTE: APPLY THIS DETAIL#7 TO GYPSUM WALLS BETWEEN OFFICES, ACCORDING TO REFLECTED CEILING PLANS

### DETAIL 8

SCALE: N.T.S.

NOTE: THIS DETAIL #8 APPLIES TO ALL REMAINING SPACES GYPSUM WALLS

### DETAIL 9

SCALE: N.T.S.

NOTE: THIS DETAIL #9 APPLIES TO CORRIDORS AND VAULTS GYPSUM WALLS

RUBBER BASE SPECS

4" RUBBER WALL BASE WILL BE 1/8" THICK COMMERCIAL GRADE MATTE FINISH TOELESS BASE EQUAL OR APPROVED EQUAL TO VINYL BASE EDGE BY MANNINGTON. DELIVERY UNITS WILL BE 4' X 100'2' ROLLS. INSTALLATION MUST INCLUDE 4' X 4' INSIDE AND OUTSIDE CORNERS

### DETAIL 10

SCALE: N.T.S.

NOTE: THIS DETAIL#10 APPLIES TO PR.GOV (AT MEZZANINE LEVEL) GYPSUM WALLS

## WALL TYPE PARTITIONS

SCALE: N.T.S.

OAT

| REVISIONS | | | |
|---|---|---|---|
| NO. | DESCRIPTION | DATE | BY |
| | | | |

TRIBUNAL GENERAL DE JUSTICIA
OFICINA DE ADMINISTRACION DE LOS TRIBUNALES
DIRECTORIA DE ADMINISTRACION
DIVISION DE LOCALES Y SERVICIOS ESPECIALES

APPROVED BY:

APPROVED DATE:

PROJECT NAME: OAT – MEZZANINE – ANTIGUA COCINA

PROJECT LOCATION: HATO REY, PUERTO RICO

DRAWING DESCRIPTIONS: DETALLES TECHO ACUSTICO

PROJECT DATE: 11 MARZO 2026

DRAWING DATE:

PRINTING DATE:

DRAWING SCALE: NO A ESCALA

CHECKED BY: ING. DANIEL PADILLA

DRAWN BY: PETER RUBI

FILE NAME:

SHEET NO. A-5

OF: 5/10