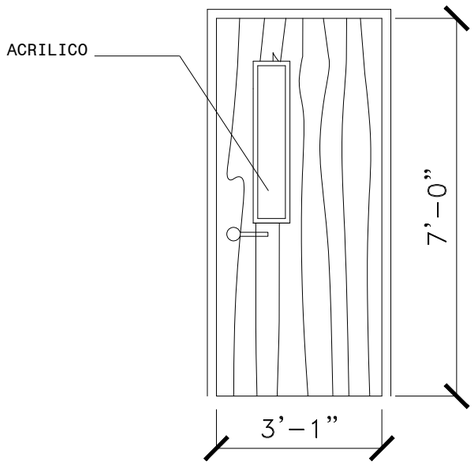

(A) PUERTA CON VISION PANEL

ESCALA: 3/4" = 1'-0"

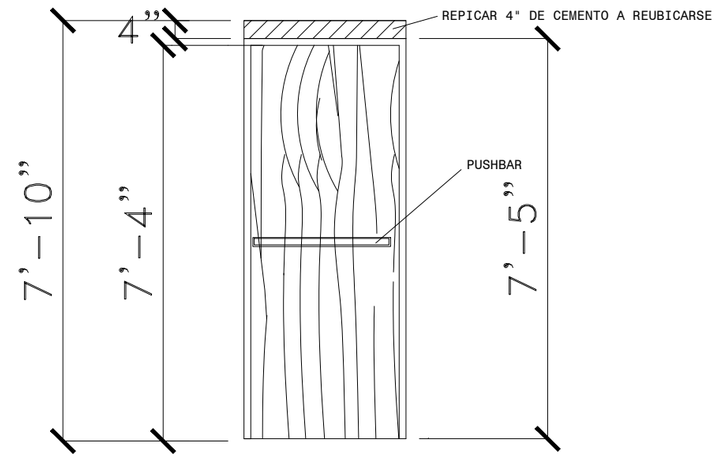

(B) PUERTA EXISTENTE CON PUSHBAR A REUBICARSE

ESCALA: 3/4" = 1'-0"

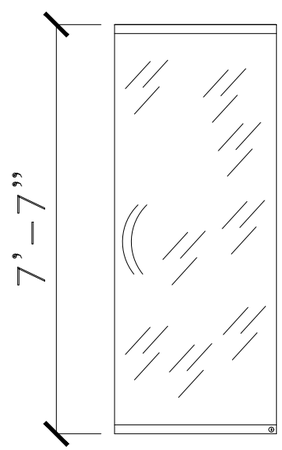

(C) PUERTA DE CRISTAL Y METAL EXISTENTE A REUBICARSE

ESCALA: 3/4" = 1'-0"

OAT

REVISIONS			
NO.	DESCRIPTION	DATE	BY

TRIBUNAL GENERAL DE JUSTICIA
OFICINA DE ADMINISTRACION DE LOS TRIBUNALES
DIRECTORIA DE ADMINISTRACION
DIVISION DE LOCALES Y SERVICIOS ESPECIALES

APPROVED BY:

APPROVED DATE:

PROJECT NAME: OAT - MEZZANINE - CUARTO DE SEGURIDAD

PROJECT LOCATION: HATO REY, PUERTO RICO

DRAWING DESCRIPTION: DETALLES DE PUERTAS

ARCHITECT: OSCAR HERNANDEZ

CHECKED BY: ING. DANIEL PADILLA

DRAWN BY: PETER RUBI

FILE NAME:

PROJECT DATE: 11 MARZO 2026

DRAWING DATE:

PRINTING DATE:

DRAWING SCALE: 3/8"=1'-0

SHEET NO. A-8

OF: 9/10