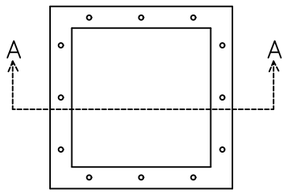

TOP VIEW

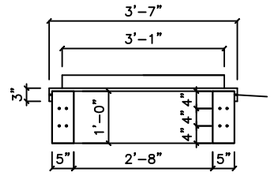

SECCION A-A
SIDE VIEW

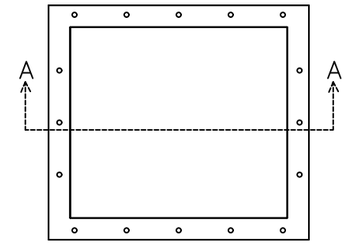

TOP VIEW

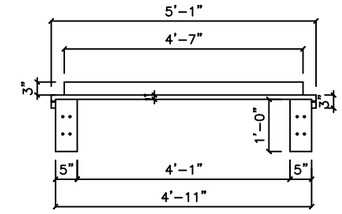

SIDE VIEW

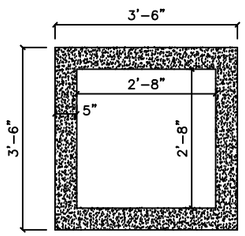

AS-BUILT
CURB "A"

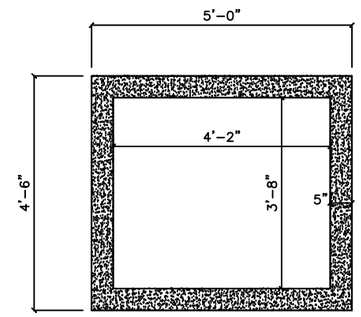

AS-BUILT
CURB "B"

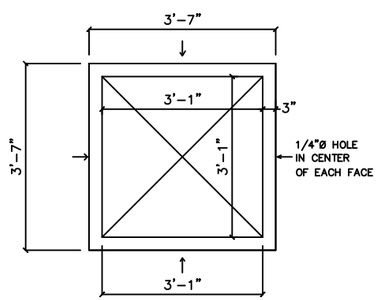

NEW RAIN COVER "A"

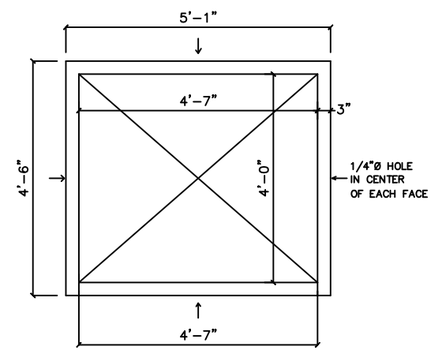

NEW RAIN COVER "B"

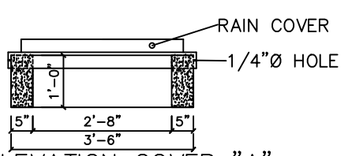

ELEVATION COVER "A"

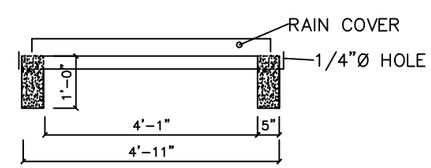

ELEVATION COVER "B"

OAT

REVISIONS			
NO.	DESCRIPTION	DATE	BY

TRIBUNAL GENERAL DE JUSTICIA
OFICINA DE ADMINISTRACION DE LOS TRIBUNALES
DIRECTORIA DE ADMINISTRACION
DIVISION DE LOCALES Y SERVICIOS ESPECIALES

APPROVED BY:

APPROVED DATE:

PROJECT NAME: AREA DE SUBESTACION

PROJECT LOCATION: OAT

DRAWING DESCRIPTIONS: NEW RAIN COVERS

ADMINIST. TEC.: DONAHAN SANTOS

CHECKED BY: ING. DANIEL PADILLA

DRAWING BY: PETER RUBI

FILE NAME:

PROJECT DATE: 8 SEPTIEMBRE 2026

DRAWING DATE:

PRINTING DATE:

DRAWING SCALE: 3/4"=1'-0"

SHEET NO. 2 OF: 7