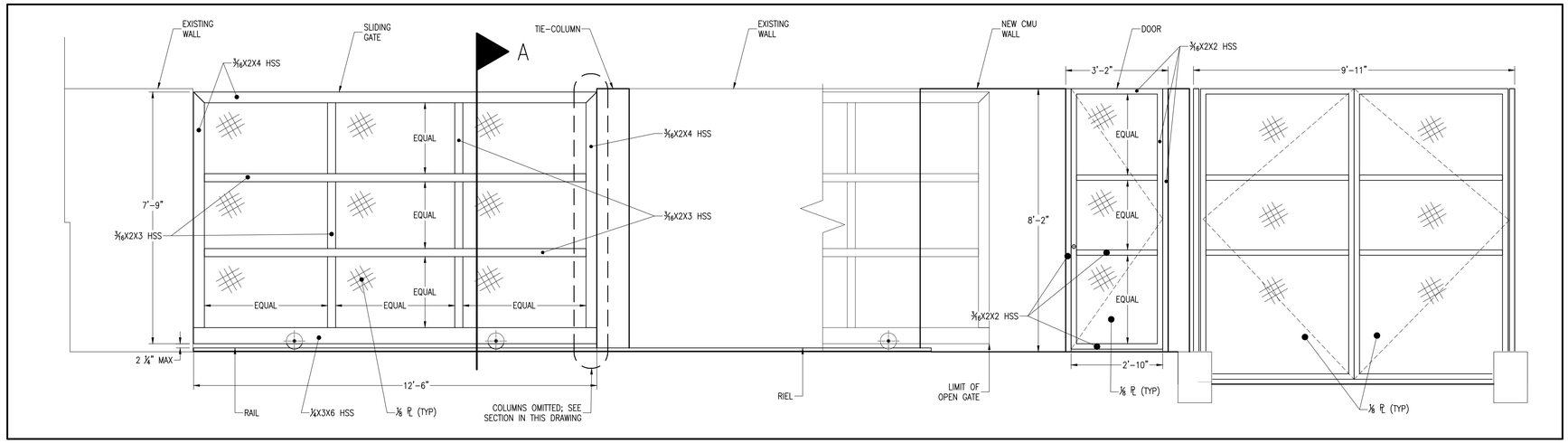

1 SI-2 WEST WALL INTERIOR ELEVATION

SCALE: 1/2" = 1' - 0"

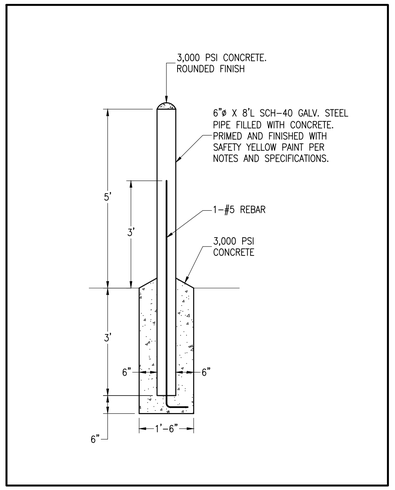

BOLLARD

SCALE: 1/2" = 1' - 0"

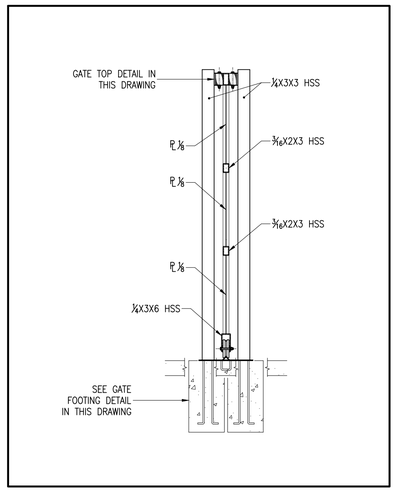

SECTION A-A

SCALE: 1/2" = 1' - 0"

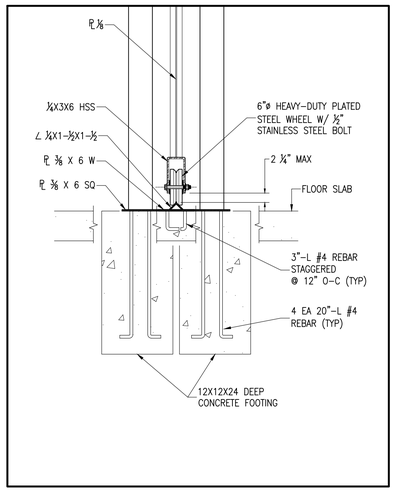

GATE FOOTING DETAIL

SCALE: 1" = 1' - 0"

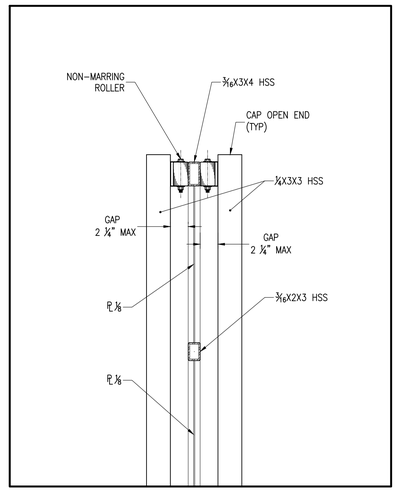

TOP OF GATE DETAIL

SCALE: 1" = 1' - 0"

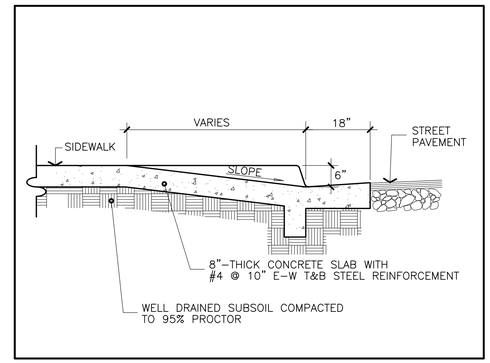

GUTTER DETAIL

NOT TO SCALE

NOTE

ALL GALVANIZED STEEL SHALL BE PRIMED WITH ONE COAT OF SPECIALLY FORMULATED HIGH-BUILD, RUST-INHIBITING ALKYD PRIMER (LANCO SUPER GALVANIZED PRIMER SG-664 OR APPROVED EQUAL)

PAINT ALL PRIMED METALS WITH TWO COATS OF ACRYLIC URETHANE ENAMEL, COLOR AS SHOWN. (LANCO BASE TT-E-489G OR APPROVED EQUAL)

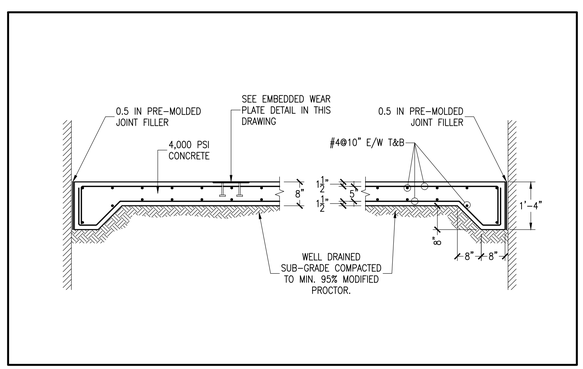

SECTION THROUGH STRUCTURAL SLAB

NOT TO SCALE

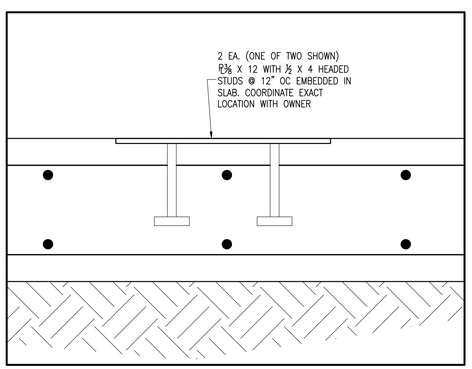

EMBEDDED WEAR PLATE DETAIL

NOT TO SCALE

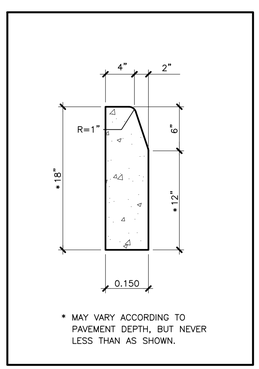

TYPE-D CURB DETAIL

NOT TO SCALE

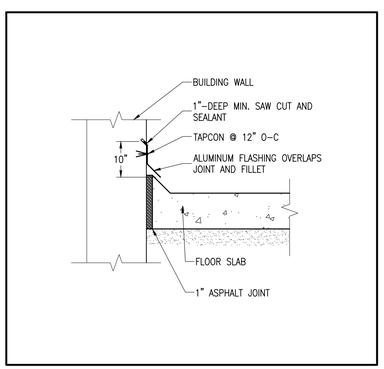

FLASHING DETAIL

NOT TO SCALE

MANUEL GARCIA ANGELI

MECHANICAL ENGINEERING

THE HATO REY CENTER
SUITE 405
268 PONCE DE LEON AVE.
HATO REY

PO BOX 270421
SAN JUAN, PR 00928

787 373 9460
MGARCIA.PE@GMAIL.COM

THIS DRAWING OR PRINT DEPICTS THE DESIGN EFFORT OF MGA CONSULTING ENGINEER, AND IS ISSUED FOR REVIEW SOLELY AS AN INSTRUMENT OF THE SERVICES BEING RENDERED. IT REMAINS THE PROPERTY OF THIS OFFICE, SHALL BE USED ONLY BY AUTHORIZED PERSONS, AND SHALL NOT BE COPIED, REPRODUCED OR EXHIBITED UNLESS PERMISSION IN WRITING IS GRANTED. IT SHALL BE RETURNED UPON REQUEST.

PROFESSIONAL SEAL:

PROJECT

WORLD PLAZA - RELOCALIZACIÓN COMPACTADORA DE BASURA

SAN JUAN

Puerto Rico

REVISIONS

Rev	Date	Description
0	01 JUN 23	NEW DRAWING
2	15 FEB 24	GENERAL REVISION

File Name: .

Scale: AS SHOWN Date: FEB 2023

DRAWING TITLE

SITE DETAILS

DRAWING NO.

SI-2